A2S Mercury Slip Ring

(2Circuits, 4A per circuit, AC250V)

Photo&Specification&Dimension:



Installation Guide:

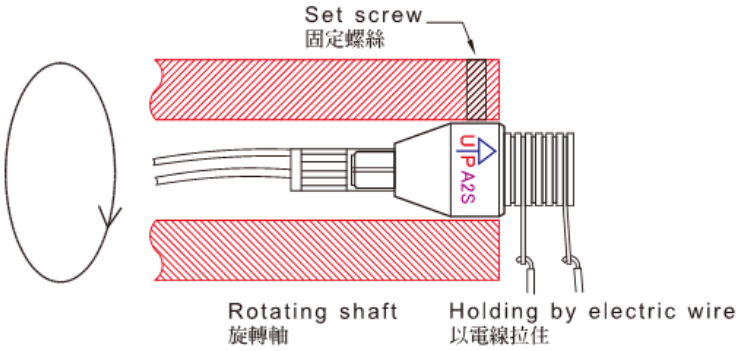

Function Description

Mercury slip ring is produced with special sealing materials, insulation and conductive technology, made of aluminum alloy or stainless steel, applied for any rotating objects of signal transmitting such as tiny voltage¤t, EMF, thermocouple, strain gauge, audio and video signals, high frequency, computer signals and electric power connections

Model#	Poles	Current(A) /Poles	Dielectric Strength AC/DC(V)	Max Frequency MHZ	Contact Resistance	Max Speed (RPM)	Work Temperature Max/Min℃	Torque (gm-cm)	Insulation Resistance
A2S	2Poles	4	--	200	＜1mΩ	2000	-30℃-60℃	75	＞25MΩ

Caution：

1. Working temperature does not exceed 60, indoor temperature and self-heating (rotating and electric connection)
2. Vertical installation and shortage should keep the UP towards direction
3. Installing the slip ring into the shaft should keep no eccentricity
4. Do not solder on the slip ring and copper terminals
5. Special connection terminals can’t use reduplicate
6. Vibration will shorten the working life
7. The slip ring can be mounted by the body or plastic collar but it couldn’t carry any mechanical loads. Another end should be connected floating hold by wires

Pls follow above instructions, otherwise it will cause the danger or shorten the working life