FB01 series Optics Fiber Slip Rings

Features

FB01 slip rings are 1 channel FORJ, standard, off-the-shelf. It could support 1 channel fiber optics(SM/MM) transmitting on 360° rotating.1-channel (SM or MM) rotary joints(FORJ) are the most versatile designs the market has ever seen. The rugged body allows fiber pigtail, ST, or FC receptacles on either the rotor side or the stator side. One can configure the package to fit his need exactly. features extremely low insertion loss and impressive return loss performance for both singlemode and multimode fibers. FB01 are often used with electronic sliprings, call optical-electrical hybrid slipring, transmit power and high speed data.



FB01 series Slip Rings

Online Chat

Options(On your request)

Connector types(SC,FC,ST,etc..),Combine with Power circuits and signal circuits

Parts#	Mode	Wave Length
FB01-S	Single-Mode	850nm~1550nm
FB01-M	Multiple-Mode	650nm~1310nm

FB01(1 channel FORJ) Specifications			
Wavelength	650nm~1550nm	Insertion loss	<1.5dB
Insertion loss ripple	<+/-0.25 dB	Return loss (SM/MM)	>40 dB(RFC/RST)
Maximum speed	600 RPM	Press compensation	1000 psi
Pulling strength.	10N	Start up torque	0.02N/m
Estimated life cycle	300 million	power handling	23 dBm
Working temperature	-40 to 85 °C	Storage temperature	-50 to 85 °C
Package style	Pigtail or receptacles	Housing materia	Stainless steel
Fiber types	sigle-mode/multiple-mode	Connector	FC
IP rating	IP 51	Weight	50g
Lead length	1000mm		

Drawings

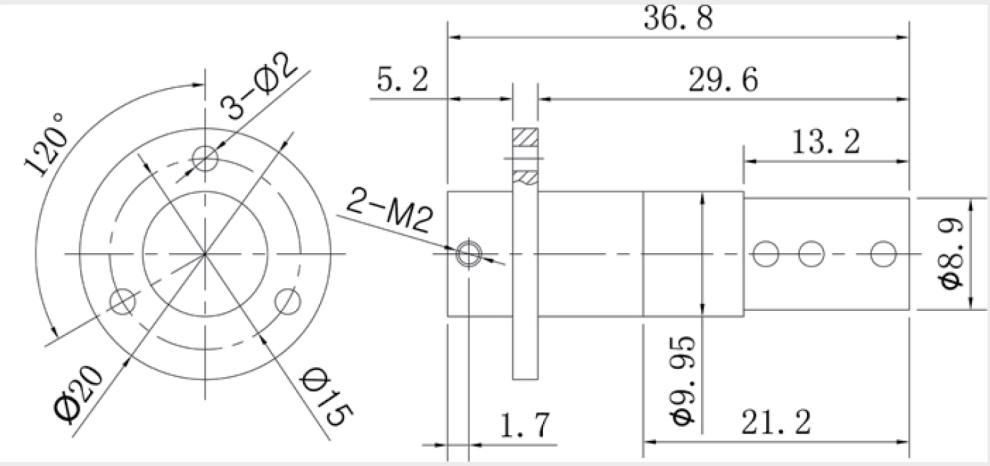

Typical applications

Industrial machinery-machining centers, rotary index table Heavy equipment turrets, cable reels, test equipments Packaging machines, palletizing machines, magnetic clutch, process equipment Rotary sensors, emergency lighting, robotics Exhibit/display equipment, medical equipment

Customized on your request

If you don't see what you want in this website,let us know; we may already have it designed or we will modify a design to meet your requirements. In many cases the specifications in the catalog can be changed to include bore size, circuits number, higher current/voltage,flange, lead wire length,shielding,connectors,higher speed,IP68,military grade,higher temperature, mixed with pneumatic/hydraulic capability. Please ask if you don't see exactly what you need as only a small fraction of our Rion slip rings are included in this catalog!

For a detailed outline drawing/3D modal files of a specific model number, or to request a quotation, please contact your local sales representative or send an email to sales@rionsr.com