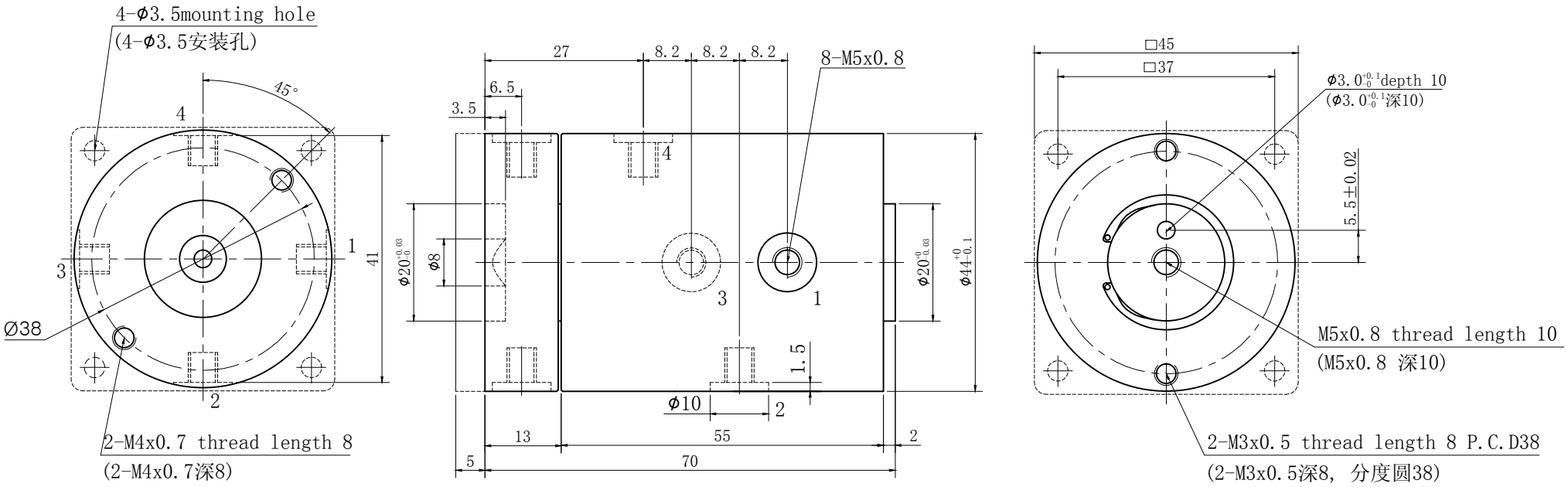
4-Φ3.5mounting hole
(4-Φ3.5安装孔)
45°
4
1
3
2
41
Ø38
2-M4x0.7 thread length 8
(2-M4x0.7深8)
27
8.2
8.2
8.2
8-M5x0.8
6.5
3.5
Φ20
Φ8
Φ20
Φ44
1.5
Φ10
13
55
2
5
70
□45
□37
Φ3.0 depth 10
(Φ3.0深10)
5.5±0.02
M5x0.8 thread length 10
(M5x0.8 深10)
2-M3x0.5 thread length 8 P.C.D38
(2-M3x0.5深8, 分度圆38)